U.S. COAST GUARD CUTTERS

C.G. 65-71

No. 65 GEORGE W. CAMPBELL
No. 66 SAMUEL D. INGHAM
No. 67 WILLIAM J. DUANE
No. 68 ROGER B. TANEY
No. 71 GEORGE M. BIBB
No. 69 ALEXANDER HAMILTON
No. 70 JOHN C. SPENCER

RESTRICTED

NUMBER & ORDER OF SHEETS	
1	COVER & TITLE PAGE
2	OUTBOARD PROFILE
3	INBOARD PROFILE
4	BRIDGES
5	MAIN DECK
6	SECOND DECK
7	PLATFORM DECK
8	HOLD

CORRECTED TO SUIT SHIP		
PLACE	DATE	CONSTRUCTION OFFICER

BOOKLET OF GENERAL PLANS

PREPARED AT NAVY YARD, PHILADELPHIA

DRAWN BY T.K. TORGAN
TRACED BY T. TORGAN
ASSOC. NAV. ARCH. HILL
NAVAL ARCH. CH. OF DIV.
DATE
PRIN. NAVAL ARCHITECT
CONSTRUCTOR U.S.C.G.
CAPTAIN (CC) U.S.N. MANAGER

C.G. 6571-0101-20 SHEET No. 1 OF 8

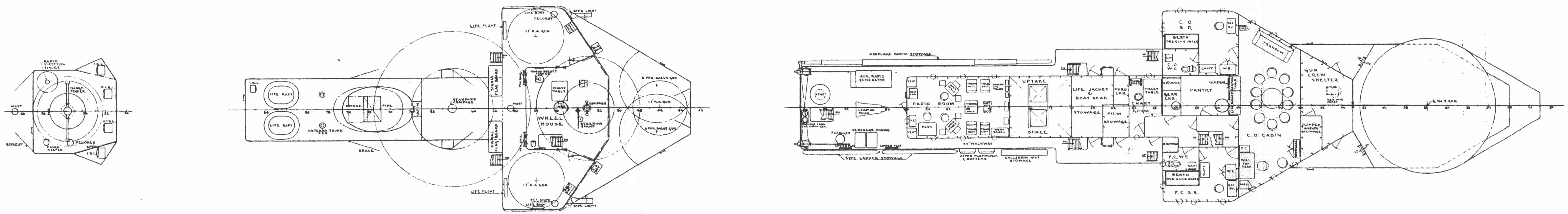

U.S. COAST GUARD CUTTERS
CG. 65-71
BRIDGES
SCALE ⅛"=1 FT

C.G. 6571-0101-20 SHEET No. 4 OF 8

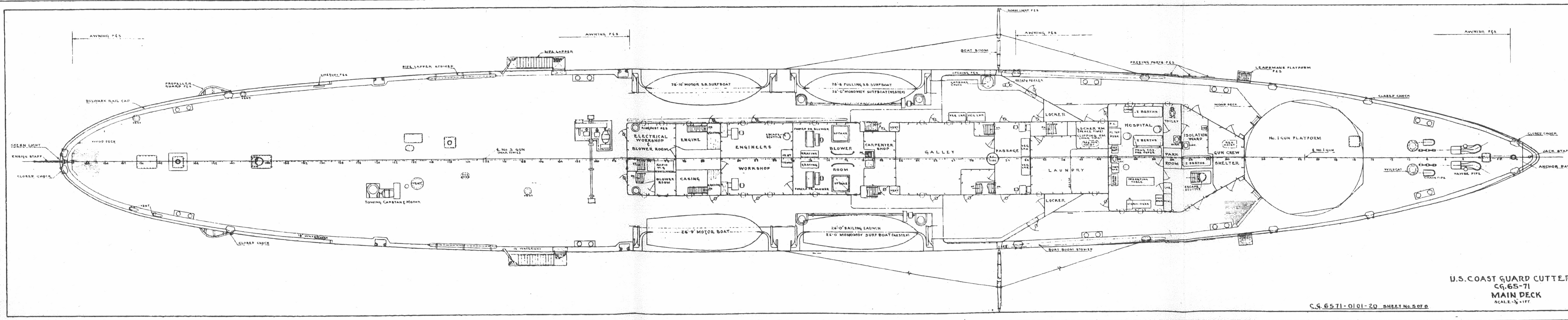

U.S. COAST GUARD CUTTERS
CG. 65-71
MAIN DECK
SCALE ⅛"=1 FT

C.G. 6571-0101-20 SHEET No. 5 OF 8

GENERAL INFORMATION

LENGTH BETWEEN PERPENDICULARS	308'-0"
LENGTH OVER ALL	327'-0"
BREADTH MOLDED EXTREME (FRS 76-93) AT DWL	41'-0"
DRAFT ABOVE BOTTOM OF KEEL (DESIGNED)	12'-6"
RUDDER AXIS	FR 146
CENTER OF PROPELLERS	FR 142
CENTER OF STRUTS	5'-0" FWD FR 142
DISTANCE BETWEEN FOREMAST AND STUBMAST	11'-2"

HEIGHT ABOVE D.W.L. (12'-6" ABOVE BOTTOM KEEL)

TOP OF FLAG & PENNANT STAFF CAP FOREMAST	114'-7⅞"
TOP OF STUBMAST	51'-0 ¹⁄₁₆"
TOP OF TRUCK LIGHT FOREMAST	112'-2½"
ELECTRIC RANGE LIGHT	74'-0"
ELECTRIC MASTHEAD LIGHT	53'-0"
MAIN DECK AT STERN	13'-10¼"
UPPER DECK ABOVE MAIN DECK (MOLDED)	7'-9"
NAVIGATING BRIDGE ABOVE UPPER DECK (MOLDED)	9'-3"

COMPLEMENT

FORCE COMMANDER	1
CAPTAIN	1
WARDROOM	9
WARRANT OFFICERS	4
CHIEF PETTY OFFICERS	14
ENLISTED MEN	98
	TOTAL = 127

SMALL BOATS

	EACH	TOTAL
1 26'-0" SAILING LAUNCH		
1 25'-6" PULLING S.B. SURFBOAT		
2 26'-0" MONOMOY SURFBOAT		
1 26'-6" MOTOR BOAT		
1 25'-10" MOTOR S.B. SURFBOAT		
TOTAL ACCOMMODATION		

FIRE PLUGS

MAIN DECK	4	ENGINE ROOM	1
2ND. DECK	5	AUX. MACH. ROOM	1
BOILER ROOM	1		TOTAL: 12

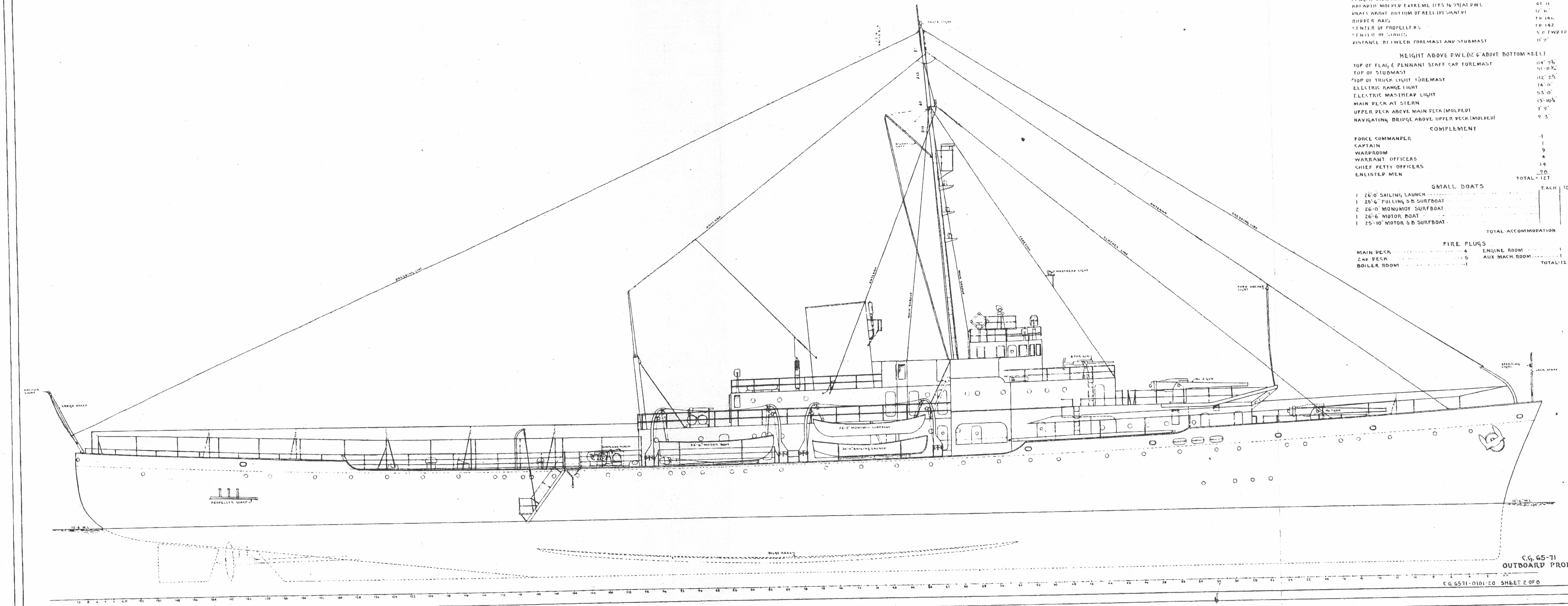

C.G. 65-71
OUTBOARD PROFILE

C.G. 6571-0101-20 SHEET 2 OF 8

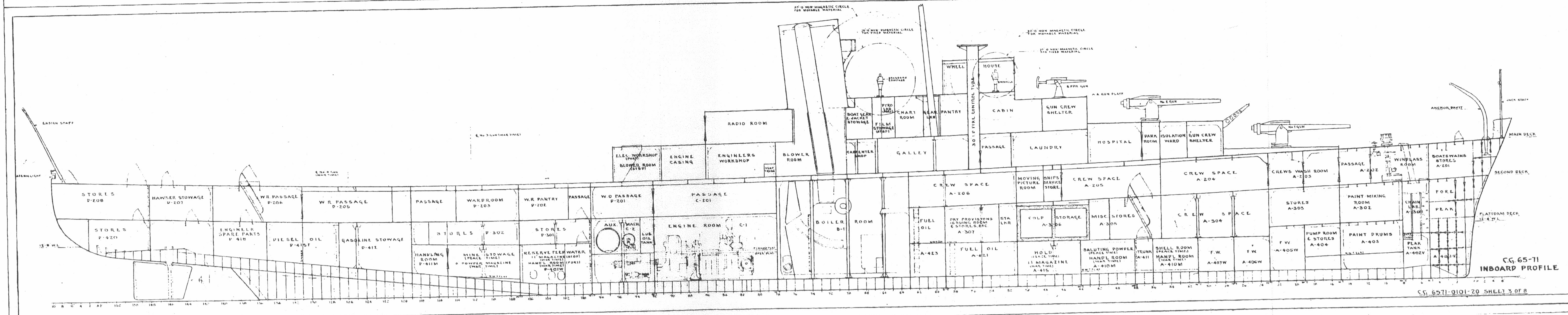

C.G. 65-71
INBOARD PROFILE

C.G. 6571-0101-20 SHEET 3 OF 8